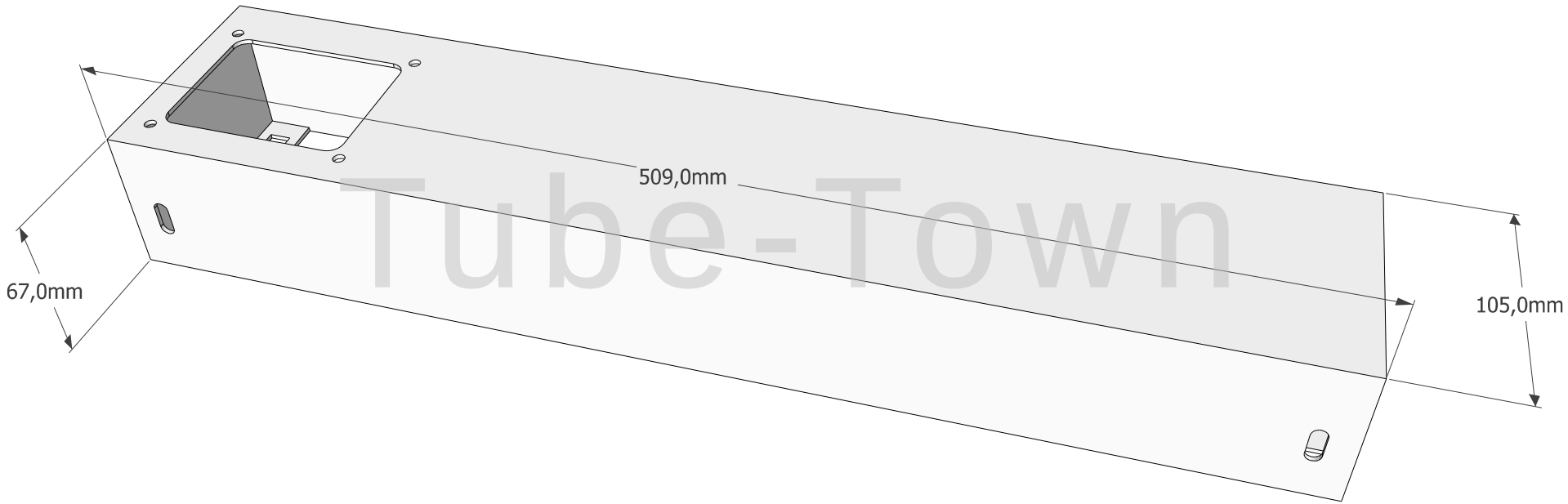

Tube-Town

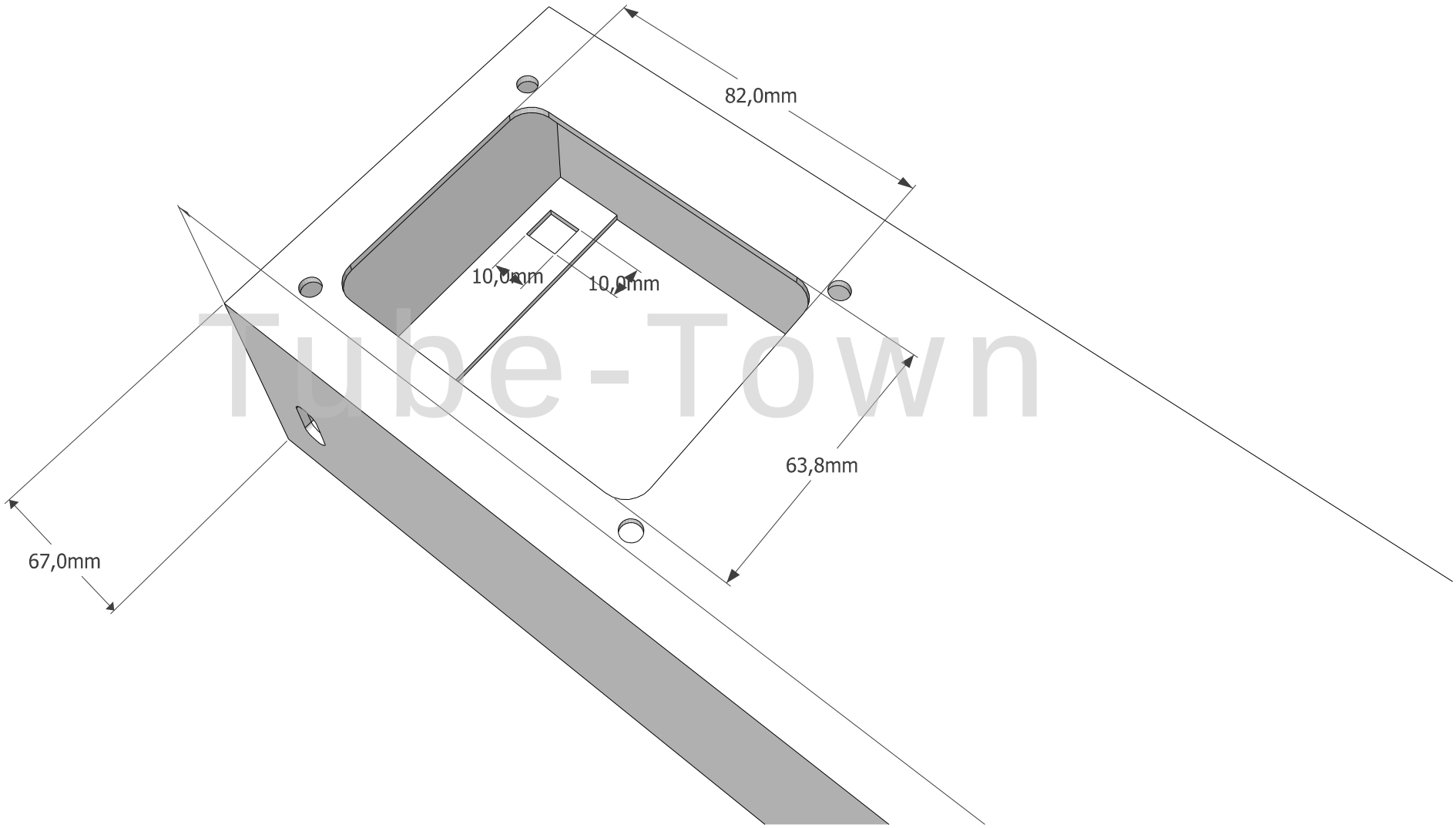

Tube-Town